Electrolux PROFESSIONAL

Warewashing green&clean hood type Dishwasher with ZERO LIME Device

ITEM #

MODEL #

NAME #

SIS #

AIA #

505104 (EHT8LGUK)

Hood Type Dishwasher, with single skin manual hood, atmospheric boiler, ZERO LIME Device, built-in detergent detergent, rinse aid dispenser and drain pump, 80r/h

Short Form Specification

Item No.

Unit to be Electrolux Green & Clean upright hood type hot water rinsing dishwasher. Electrical characteristics to be __400 volts, three phase 50Hz operation, convertible to single phase on-site. Uses 2 liters of clean water per final rinse cycle. 84°C rinse temperature and pressure guaranteed by AISI 304 built in atmospheric boiler and built in rinse booster pump. Washing performance is guaranteed by a powerful 0.8 kW wash pump and upper and lower stainless steel revolving washing spray arms. ZERO LIME Device automatically de-scales the whole hydraulic circuit and washing chamber. 304 Stainless steel construction to include single skin hood, external, front and side panels, wash tank, tank filter plus wash and rinse arms. Unit shall be field convertible from straight to corner operation. The unit shall include drain pump and rinse aid dispenser pump detergent and is equipped with flexible fill hoses. Delivered on height-adjustable feet.

APPROVAL:

Main Features

- Built-in atmospheric boiler sized to raise incoming water to a minimum of minimum 84 °C for sanitizing rinse. No external booster is required. Constant temperature of 84 °C throughout the rinsing cycle regardless of the network's water pressure.
- Unique temperature interlock guarantees required temperatures in both the wash and final rinse in case of emergency cold water feeding.
- Incorporated Soft Start feature to offer additional protection to more delicate items.
- Cycle may be interrupted at any time by lifting the hood.
- Automatic self-cleaning cycle and self-draining vertical wash pump and boiler to avoid bacteria proliferation.
- State-of-the-art electronic controls with built-in programming, self-diagnostics for serviceability and automatic interior self-cleaning cycle.
- Boiler power setting from control panel to facilitate technician's operation when reducing total installed power, thus avoiding the need of machine opening.
- Three phase electrical connection, convertible to single phase on-site.
- IP25 protection against water jets, solid objects and small animals (larger than 6 mm).
- Slanted wash arms to avoid detergent-filled wash water dropping on clean dishes after the rinsing phase, thus guaranteeing ideal washing results.
- Built-in rinse aid and detergent dispenser with automatic initial and continuous cycle loading for perfect result while minimizing service and maintenance needs.
- NSF/ANSI 3 and DIN 10512 compliant.
- Maximum capacity per hour of 80 racks or 1.440 dishes (High productivity mode) easy to switch to 63 racks or 1.134 dishes (NSF/ANSI 3 mode) by pressing a button.
- 45/84/150 seconds cycles (High productivity mode); 57/84/150 seconds cycles (NSF/ANSI 3 mode).

Electrolux PROFESSIONAL

Warewashing green&clean hood type Dishwasher with ZERO LIME Device

Construction

- Heavy duty Stainless steel construction. Internal cavity as well as exterior panels are in 304 series Stainless steel.
- Pressed tank in front position to facilitate cleaning.
- Specially designed Stainless steel wash/rinse arms and nozzles provide superior cleaning action.
- Revolving interchangeable Stainless steel wash/rinse arms above and below the rack, screw out for simple clean up.
- Pre-arranged for on-site HACCP implementation and Energy Management device.
- Element protection from dry fire and low water.
- Single skin hood supported by 3 springs to ensure smooth movement and guarantee operator safety.
- Unit to include drain, detergent and rinse aid dispenser pumps

Sustainability

- ZERO LIME Device ensures total scale removal from the boiler, the hydraulic circuits and the washing chamber allowing ultimate performances and lower energy consumption thanks to the high-efficiency heating element.
- Requires only 2 liters of water per washing cycle thus ensuring low energy, water, detergent and rinse aid consumption.
- The machine can be connected to cold water.

Included Accessories

- 1 of Yellow cutlery container PNC 864242
- 1 of Basket for 18 dinner plates - yellow PNC 867002

Optional Accessories

- Kit 8 plastic boxes for cutlery - yellow PNC 780068 ❑
- 12lt external manual water softener PNC 860412 ❑
- 8lt external automatic water softener PNC 860413 ❑
- 20lt external manual water softener PNC 860430 ❑
- Connectivity kit for Double Skin Hood Type Dishwashers (ECAP) PNC 864007 ❑
- Stainless steel inlet hose kit PNC 864016 ❑
- Filter for partial demineralization PNC 864017 ❑
- Kit to measure total and partial water hardness PNC 864050 ❑
- Yellow cutlery container PNC 864242 ❑
- CLEAR BLUE Filtering System kit for single skin hood type PNC 864329 ❑
- Filter for total demineralization PNC 864367 ❑
- Front control panel for single skin hood type dishwasher PNC 864374 ❑
- External reverse osmosis filter for single tank Dishwashers with atmosphere boiler and Ovens PNC 864388 ❑
- Pressure reducer for single tank dishwasher PNC 864461 ❑
- Kit of rack and support to wash fryer basket PNC 864463 ❑
- Kit of 100mm feet for Hood Type Dishwasher PNC 864464 ❑
- Connecting kit for duet manual hood type dishwasher PNC 865264 ❑
- Feet for Hood type dishwashers - marine PNC 865492 ❑
- Extra heavy rack support for hood type dishwasher PNC 865493 ❑
- Kit 4 plastic boxes for cutlery - yellow PNC 865574 ❑
- Basket for 6 trays 530x370 mm - red PNC 866743 ❑
- Basket for 12 soup bowls - green PNC 867000 ❑
- Basket for 18 dinner plates - yellow PNC 867002 ❑
- Basket for 48 small cups or 24 cups - blue PNC 867007 ❑
- Basket for bulk cutlery-capacity: 100 pieces - brown PNC 867009 ❑
- Cover rack for small and light items (500x500 baskets) PNC 867016 ❑
- Baskets for 25 tilted glasses (h 120 mm - diam 80 mm) - blue PNC 867021 ❑
- Basket for 16 vertical glasses (h 70 mm - diam 100 mm) - blue PNC 867023 ❑
- Basket semi-professional 500x500x190mm PNC 867024 ❑
- Baskets for 16 tilted glasses (h 220 mm - diam 100 mm) - blue PNC 867040 ❑

Warewashing green&clean hood type Dishwasher with ZERO LIME Device

Front

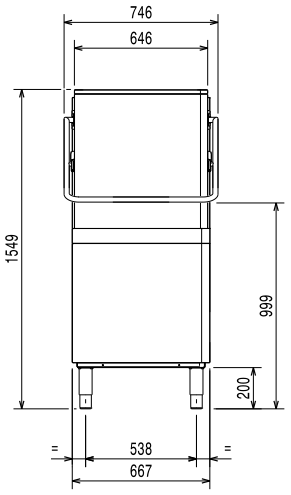

Side

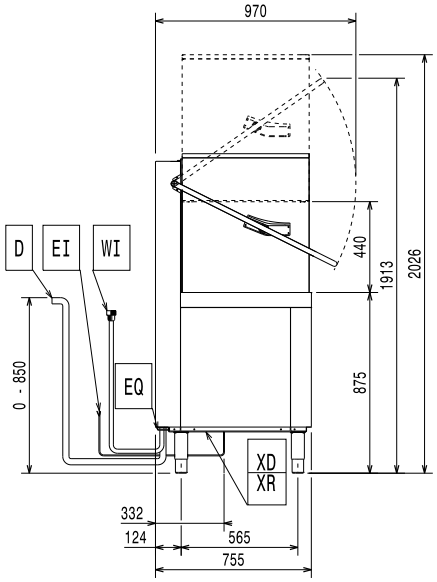

CWI1	=	Cold Water inlet 1 (cleaning)	XI	=	Chemicals inlet (generic)
D	=	Drain	XR	=	Rinse aid connection
EI	=	Electrical inlet (power)			
EO	=	Electrical Outlet			
HWI	=	Hot water inlet			
WI	=	Water inlet			
XD	=	Detergent connection			

Top

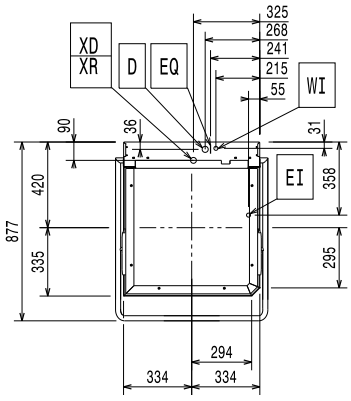

Electric

Supply voltage:	
505104 (EHT8LGUK)	400 V/3N ph/50 Hz
Convertible to:	230V 3~; 230V 1N~ 50Hz
Default Installed Power:	9.9 kW
Reducible Installed Power:*	6.9 kW
Boiler Heating Elements Power:	9 kW
Boiler Reducible To:*	6 kW
Tank heating elements:	3 kW
Wash pump size:	0.8 kW

Water:

Water supply temperature*:	10-65 °C
Drain line size:	20.5mm
Inlet water supply pressure:	0.5-7 bar
Water consumption per cycle (lt):	/ 2
Boiler Capacity (lt):	12
Tank Capacity (lt):	24

Key Information:

N° of cycles:	3
Duration cycle:*	45/84/150 sec.
Duration cycle - NSF/ANSI 3 compliant:	57/84/150 sec.
Racks per hour:*	80
Racks per hour - NSF/ANSI 3 compliant:	63
Dishes per hour:*	1440
Dishes per hour - NSF/ANSI 3 compliant:	1134
Wash temperature:	55-65 °C
Wash temperature - NSF/ANSI 3 compliant:	75 °C
Rinse temperature:	84 °C
External dimensions, Width:	746 mm
External dimensions, Depth:	755 mm
External dimensions, Height:	1549 mm
Net weight:	106 kg
Shipping weight:	122 kg
Shipping volume:	1.23 m³
Packaging size (WxDxH):	920x770x1730 mm

* According to market standard, the productivity is declared at an inlet water supply temperature of 50°C . If the water is supplied at 65°C, the power can be reduced by 3 kW without any loss in productivity.

** When connected to cold water, the cycle time will be prolonged accordingly. The machine will have productivity per hour of 48 racks at 10°C supply temperature or 55 racks at 20°C supply temperature

Air Emission:

Latent heat:	500 W
Sensible heat:	2000 W

Sustainability

Noise level:	<68 dBA

Recommended table connection

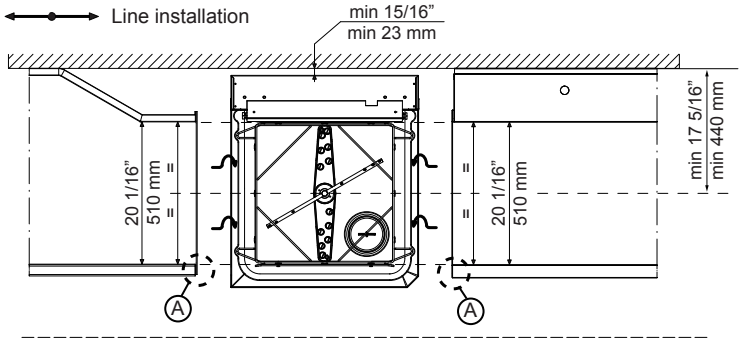

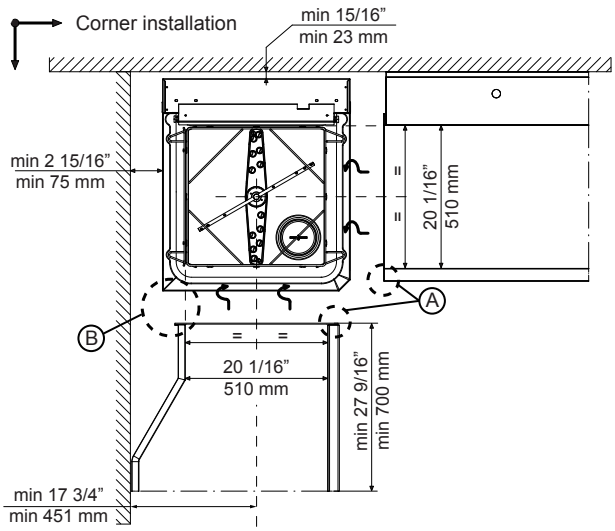

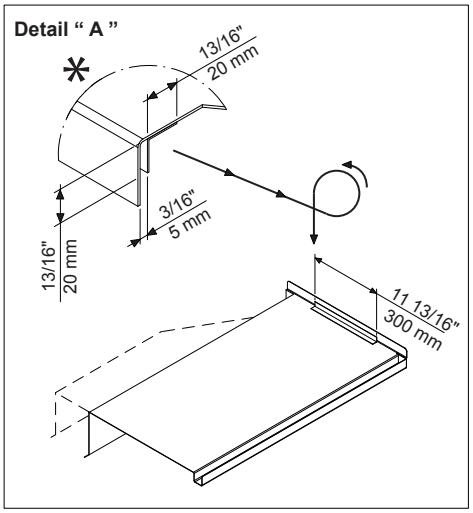

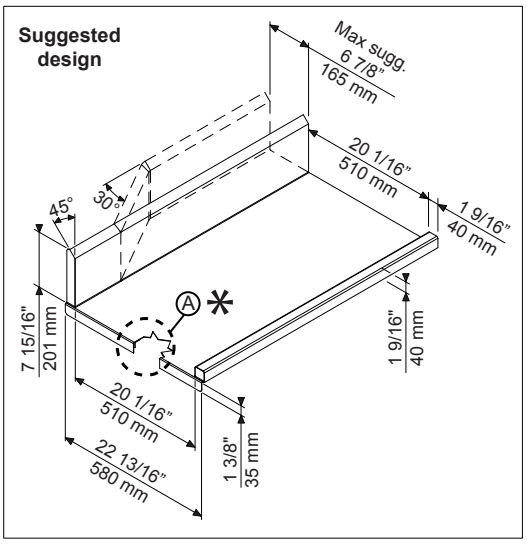

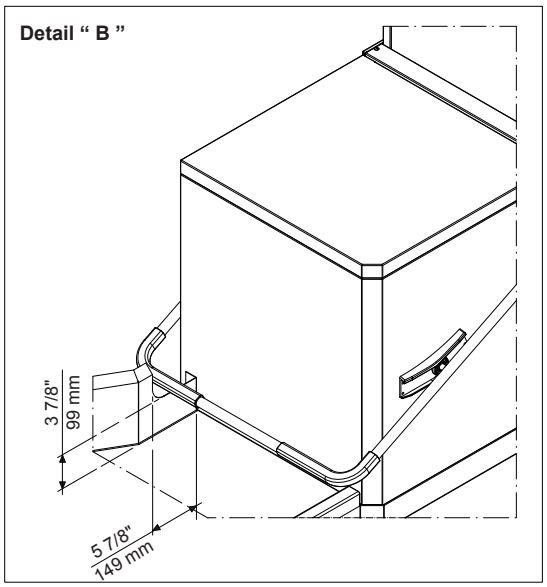

All tables must be connected to the dishwashing units according to local regulations and industry standards which may differ from the recommendations herein suggested. Electrolux Professional is not liable for any failure in complying with local design standards.

Doc Nr : 59566BF00

The company reserves the right to make modifications to the products without prior notice. All information correct at time of printing.